Installed fastener

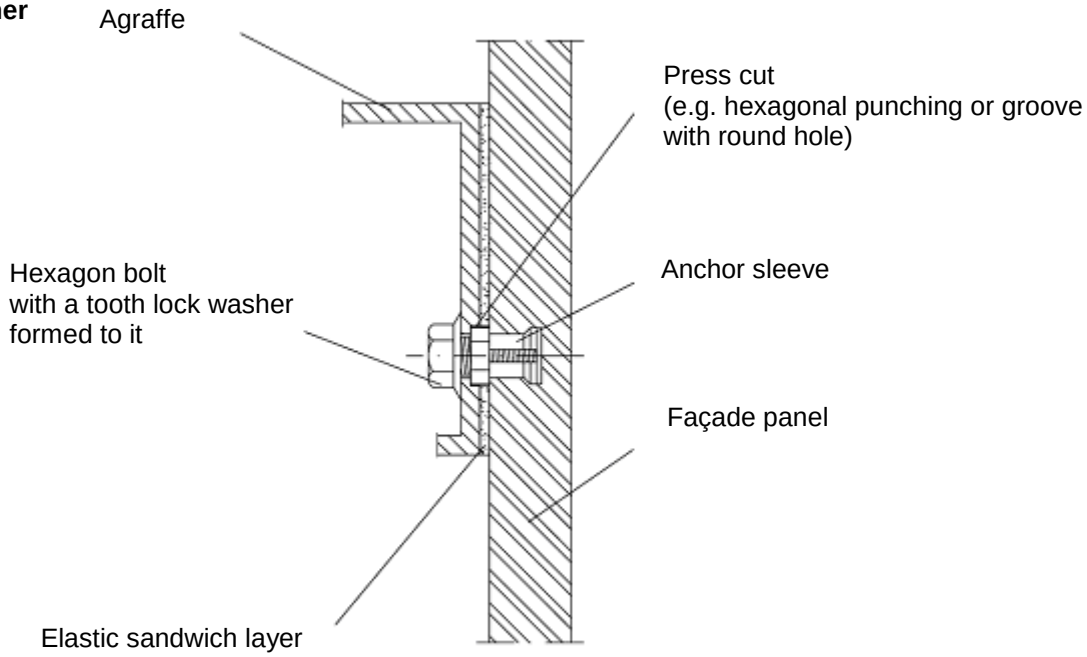

Fixing example

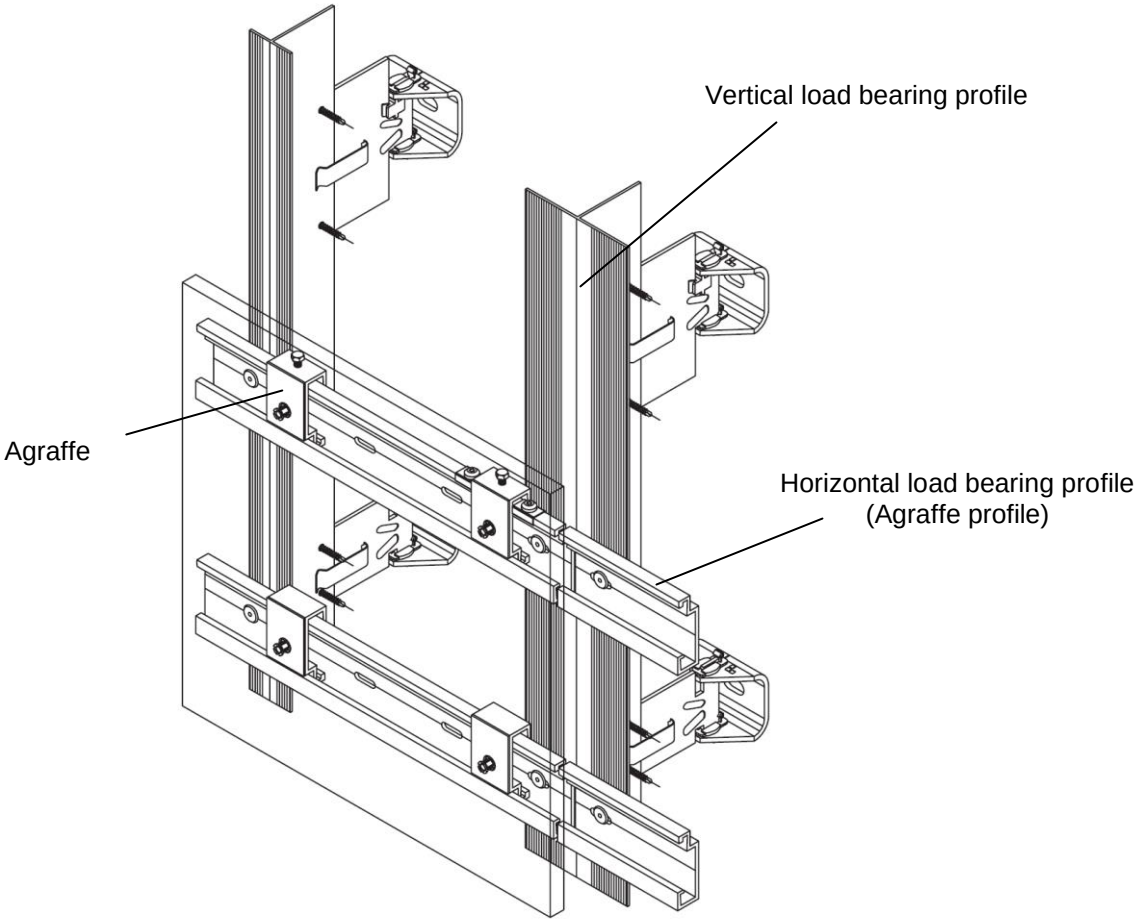

Mosa KEIL undercut anchor for "Royal Mosa stoneware"	Annex A 1
Product description Installed fastener and fixing example	

electronic copy of the eta by dibt: eta-09/0348